SMART VMS IV

SUPERIOR VISIBILITY

- Full matrix LED display with 28 rows and 54 columns
- 5” to 19” characters with up to 4 rows of messaging
- Legible distance is over 1000 feet

EASY TO USE

- Simple handcrank sign deployment
- Both local and (optional) remote sign control with easy-to-use interface
- Low maintenance with long life LEDs

FULLY AUTONOMOUS

- Once deployed, the trailer uses its 170W solar panel to remain power-positive
- Access trailer information remotely with optional ITS Cloud Manager and cellular connectivity

KUSTOM SIGNALS INC®

800.4.KUSTOM
www.kustomsignals.com

SMART VMS IV

SPECIFICATIONS

- 3’ x 4.5’ Full matrix amber LED display with 28 x 54 pixels
- 1, 2, 3, or 4-line messages legible more than 1,000 feet (305m) away
- Graphics and animations
- Kustom K-Band Directional RADAR
- 5” to 19” characters
- 11 font sizes
- NTCIP Compliant
- Compact trailer ideal for residential streets and ease of maneuverability
- 61 mph wind rating
- Message Scheduler
- 170W solar included

OPTIONS

- Flashing LED Strobes Violator Alert
- Aluminum Wheels Upgrade
- Custom Paint
- Reflective Tape
- 4G Modem with ITS Cloud Manager
- Wi-Fi Modem for local wireless connectivity
- Traffic Statistics
- Wheel Lock
- Padlock
- Locking Lugs
- Tongue-Mounted Jack With Swivel Wheel

SMALL FOOTPRINT

- Trailer is only 48 inches long by 64 inches wide
- 680 lbs allowing easy maneuverability
- Storage height of 88 inches and deployed height of 140 inches

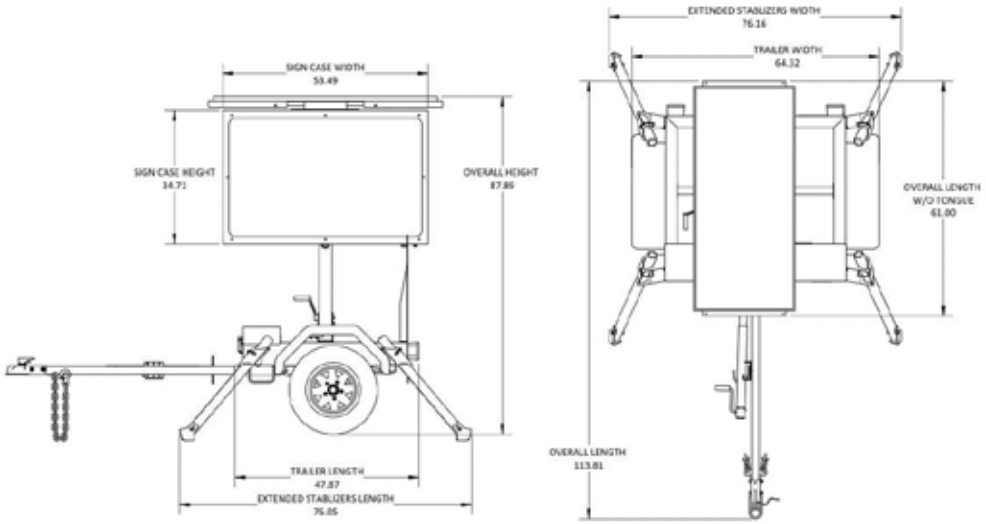

KUSTOM SIGNALS INC®

800.4.KUSTOM
www.kustomsignals.com